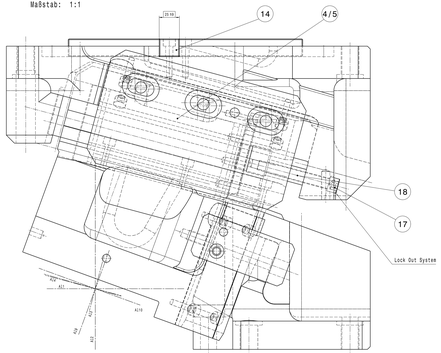

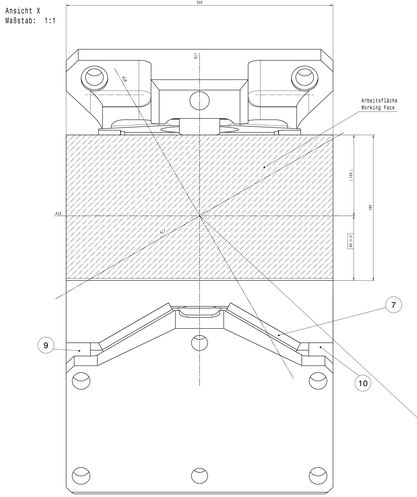

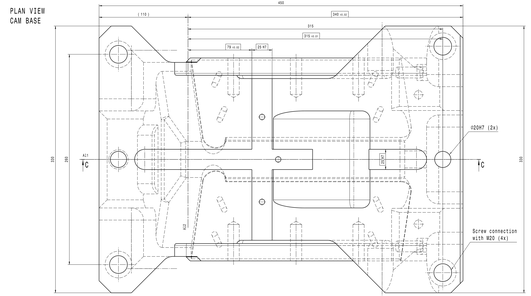

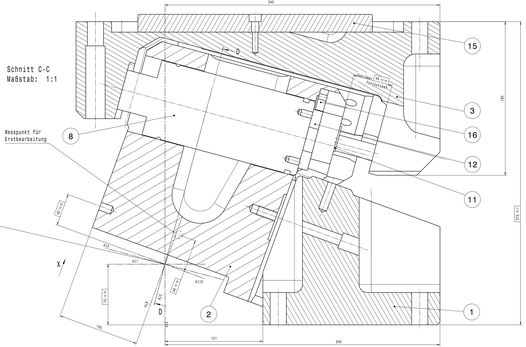

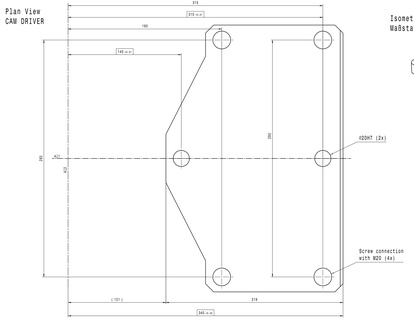

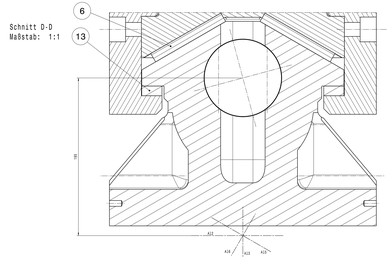

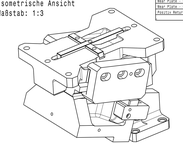

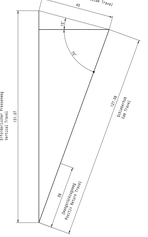

Fastening Screw Thread	Dimension	Diese Zeichnung ist geistiges Eigentum
Fastening Screw Thread Locking Pin	A x M8 x 1.25	der voestalpine Giesserei Linz GmbH.
Block Plate - Cam Base	A x M16 x 1.5	Eine Heraugabe an Dritte ohne unsere
Block Plate - Cam Driver	A x M16 x 1.5	Zustimmung ist nicht erlaubt.
Wear Plate - Cam Slider	A x M16 x 1.5	This drawing is the intellectual property
Positive Return	A x M16 x 1.5	of voestalpine Giesserei Linz GmbH.
		It transfer to a third party without
		our agreement is not allowed.
		Screw Tolerance: ±0.2
		Linearity min Tolerance: ±0.01

Technische Daten / Specification:
Schubweg / Travel of Cam: 127,1mm
Arbeitsfläche / Working Face: 330x70mm
Gesteinsbrückenqualität / Boulder Texture min.: 300Sb6

Component Parts: 23519

Pos.-No.	Anzahl	Bezeichnung	Material	Werkstoffnr	ZE.-Nr.
1	1	Cam driver	1.7970	voestalpine	1320050
2	1	Cam Slider	1.7970	voestalpine	1320001
3	1	Cam Base	1.7970	voestalpine	1320008
4	1	Block Plate (L)	1.7225 (145x40x200)	voestalpine	1320058
5	1	Block Plate (R)	1.7225 (145x40x200)	voestalpine	1320058
6	2	Wear Plate (A)	HF 750/1A (100x20x12)	voestalpine	18242
7	1	Wear Plate (B)	HF 750/1A (100x20x12)	voestalpine	18242
8	1	Gas Spring Ejector	WC 15.0000.000.75 WDS M16X5/18	GANTER	321587
9	4	Positive Return	1.7225 (120x60x60)	voestalpine	1320109
10	4	Positive Return	1.7225 (120x60x60)	voestalpine	1320109
11	2	Damping Element	PUR(ø32x42)	voestalpine	1320301
12	1	Lock Plate	1.7225 (75x170x12)	voestalpine	1320202
13	2	Wear Plate (C)	HF 750/1A (20x20x12)	voestalpine	18207
14	1	Safety Plate	1.7225 (20x20x12)	voestalpine	1320203
15	1	Fitting Peg (M)	1.2601-DT (25x50x100)	voestalpine	22377
16	1	Safety Plate	1.7225 (20x25x16)	voestalpine	1320208
17	2	Lock Out Screw	DIN 912 M10x45	voestalpine	22791
18	2	Lock Out Tube	1.7225 (ø20x3.5x40)	voestalpine	22794
19	-	-	-	-	-
20	-	-	-	-	-
21	-	-	-	-	-
22	-	-	-	-	-

voestalpine
Giesserei Linz GmbH

09							
08							
07				Gezeichnet			
06				Geprüft			
05				Norm			
04							
03	1	2011-11-02	GOMER	ISO 2768			
02	1	2010-04-12	mayr				
01	1	2009-12-02	mayr	m			
Pos.	Änderungsnr.	Datum	Name				

Benennung / Description: Aerial Cam KS-OT 330-70° 127,1 Stroke

Maßstab / Scale: 1:1

Benennung / Description: Zusammenbau

Zeichnungs-Nr. / Drawing No.: 23519

Blatt-Nr. / Sheet No.: 7

Dateiname: KS_OT_0330_70_CAM_OT_23519__AUB_127_1__2014_11_25_GOMER