ASSEMBLY INSTRUCTIONS

for the vehicle barrier system

KREMSBARRIER RW RN1

Bicycle lane barrier for pile-drivable subgrade

Performance class in accordance with EN 1317-2:

Containment level:	N1
Impact severity level:	A
Working width:	W3

Production and sales:

voestalpine Krems Finaltechnik GmbH

Schmidhüttenstraße 5, 3500 Krems, Austria

T.: +43/50304/14-670

F.: +43/50304/54-628

E-Mail: info.vasts@voestalpine.com

ID: VTMFR01

Version: 01/2015

Contents

Safety instructions

As working on vehicle barrier systems should generally be categorised as especially dangerous, such tasks should always be carried out under the supervision and instruction of applicably trained specialist personnel.

These assembly instructions assume that supervision and instruction is provided by such specialist personnel on-site.

All construction personnel must wear personal protective equipment in accordance with EC directive 89/686/EEC.

Proper use

The task of a vehicle barrier system is to restrain and redirect vehicles straying off of the carriageway and thereby minimise the consequences for passengers as well as for other road users and objects worthy of protection.

Note: *Vehicle barrier systems are generally to be used only in situations where straying off of the carriageway is likely to result in more severe consequences for vehicles and their passengers as well as for third parties or objects worthy of protection than a collision with the barrier system.*

Technical description of the vehicle barrier system

Performance class in accordance with ÖNORM, EN 1317-2:	
Containment level	N1
Impact severity level / ASI	A / 0.5
Working width / level	W3 / 0.9 m
Test length	56.00 m
System dimensions	
System width	180 mm
System height	1,200 mm
Ram depth	1,260 mm

Transport

The following points are to be observed when transporting components of the vehicle barrier systems:

- A regulation load securing system is to be made available.
- When transporting on salt-treated roads, the components must be transported on enclosed / tarpaulin-covered truck trailers.
- Avoid contact with other aggressive transported materials (e.g. residual chemicals on the loading space).
- The lifting gear is to be designed for a maximum package weight of 2.5 t.

Note: A proper load securing system must also be used when transporting equipment for installation of vehicle barrier systems.

Requirements for installation

The executing contractor (=installation firm) must have the professional aptitude and general qualifications for the undertaking of such installation work.

The installation firm must be in possession of the technical equipment required for the professional and proper undertaking of the installation work. This includes, in addition to a fleet of vehicles adapted for this type of work, especially the pile-driving equipment for the required post segments with adapted drive heads and guides as well as drilling equipment, impact screwdrivers, mandrels and measuring equipment, etc.

The installation firm must maintain all relevant national and international laws, regulations, directives, etc. and ensure that the required permits are available and have been submitted in good time.

The following must be checked by the installation firm prior to the start of installation

- Possible existing installations in the area of the anchoring must be assessed and correspondingly taken into consideration
- The suitability of the subgrade (soil class, sufficient bore depth, evenness, etc.) is to be checked.
- The definitive reference line must be marked for installation of the vehicle barrier system.
- The delivery of materials must be checked for correctness and completeness and complaints must be immediately forwarded to the supplier.
- It must be ensured that the building site is properly secured.

The customer is to be informed immediately in writing in the event that deviations are determined and the matter is to be clarified.

If components for the vehicle barrier system are to be intermediately stored, then the following warehouse conditions are to be fulfilled:

- The storage area must be capable of bearing the load and must be accessible with an HGV truck.
- Galvanised components may not be stored on tall, damp grass, in standing water or mud.
- The packages are to be stored in the original packaging on wooden slats with approximately 150 mm gap to the ground.
- The components should be stored at a slight angle, so that water can drain off.
- The formation of puddles (collection of moisture) is to be avoided.
- Foil used for purposes of securing the layers during transportation is to be removed.
- The storage area may not be treated with defrosting agents.

Long-term storage of bundled components outdoors is to be avoided.

<u>Suitable subgrade</u>

The subgrade is considered suitable for the installation of the vehicle barrier system if the following conditions are fulfilled:

- Soil classes 3, 4 and 5 of ÖNORM B 2205 and compacted subgrade which can be graded into these soil classes.
- Degree of compaction $D_{pr} \geq 97\%$
- The subgrade is suitable for pile driving.

  Soil classes 1, 3, 4 and 5 of ÖNORM B 2205 and compacted subgrades which can be graded into these soil classes and which contain no blocks are suitable for pile driving.

Note: *If the subgrade is unsuitable for pile driving, then there is the option to drill boreholes to the required depth or install suitable empty pipes, which can subsequently be filled and compacted with suitable material.*

Installation of the vehicle barrier system in accordance with data sheets FR01/2 and FR01/3 (see appendix)

The installation of the beams on the railing posts is to be undertaken in advance at the factory. Moreover, the vehicle barrier system components themselves are not pre-assembled at the factory.

Due to the fact that the vehicle barrier system is not pre-stressed, the ambient temperature at the time of installation is irrelevant.

1. Ramming Sigma posts

The minimum 1,900 mm long Sigma post is to be driven vertically into the subgrade with a suitable pile driver, so that the upper edge of the post section is 620 ±40 mm above the reference level. The open ends of the post sections are to be aligned pointing away from the traffic, as seen in the direction of traffic flow, and the bore holes must be on the upper end of the post section (post head).

The pile driver must be equipped with a suitable drive head to fit the Sigma post section, in order to prevent deformation or damage to the hot-dip galvanised coating on the post head. A guide adapted to the Sigma section is to be mounted to the pile driver near the upper edge of the ground in order to ensure precise positioning of the post during the pile driving process.

The regulation centre distance of the posts is 2,000 mm.

2. Mounting the supporting profiles

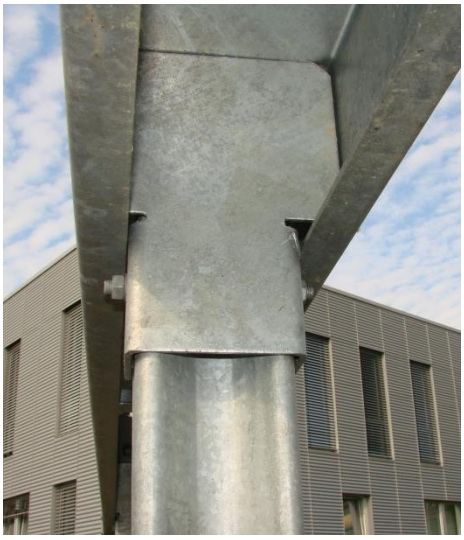

Figure 1

A supporting profile is to be positioned in a form-closed manner on each post head, so that the rectangular surface of the supporting profile projects over the Sigma post. The open ends of the Sigma sections and the supporting profiles must be on the same side and the elongated holes 12x37 mm in the supporing profile must align with the lower bore holes 12 mm in the post head. These are used to insert two hexagon bolts M10x25 FK 4.6 from the inside of the post which are then fixed in place with a washer 11 and a hexagon nut M10 FK 5 (see Fig. 1).

3. Mounting the box profile

Figure 2

The box profile is to be placed with the open side pointing downwards onto the supporting profile so that the joint axis of the box profile lies ~250 mm after the post axis, as seen from the direction of travel (see Fig. 1).

The box profiles are connected in the jointed areas with the help of a joint profile. The joint profile is connected to each box profile with eight coach bolts M16x30 FK 8.8. Four bolts are fitted to the upper side of the box and two on each of the sides. In order to do so, the hexagon bolts M16x30 FK 8.8 are fed from the outside and through the bore holes diameter 17 mm on the ends of the box profiles and into the elongated holes 22x18 mm in the ends of the joint profiles. The insides of the joint profiles are then secured with a washer each and hexagon nuts M16 FK 8 (see Fig. 2).

Direction of

4. Mounting the railing posts

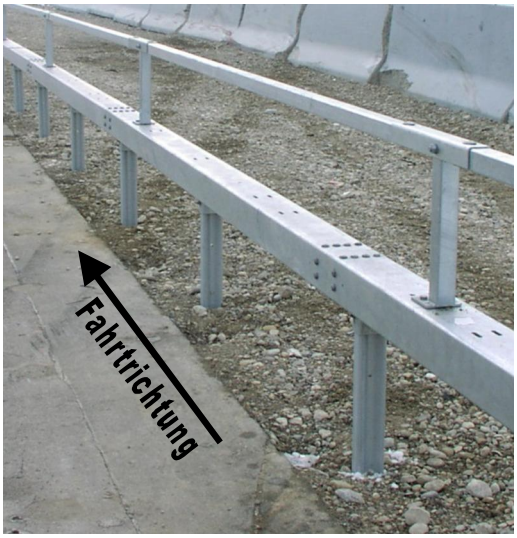

Figure 3

The railing posts are mounted at the regulation spacing of 4000 mm as seen from the direction of travel, 726 ±18 mm in front of the joint axis of the box profile. The railing posts are to be aligned so that the box profile bolting is realised after the post axis, as seen from the direction of travel. In order to do so, two hexagon bolts M14x30 FK 8.8 per railing post are fed through the bore holes diameter 15 mm of the base plate and the elongated holes 50.5x14.5 mm in the box profile. The inside of the box profiles are then secured with washers 16 and hexagon nuts M14 FK 8.

The beam connectors are supplied pre-mounted on the railing posts. They are fixed to the post with a hexagon bolt M16x90 FK 4.6, a washer 40x18x4 and a hexagon nut M16 FK 5.

5. Mounting the railing beams

The railing beam is to be inserted from underneath into both sides of the beam connector, so that the bore hole diameter 18 mm is flush with the elongated hole 18x60 mm in the beam connector. In each case, a coach bolt M16x35 FK 4.6 is inserted from above through the beam connector and the beam. The inner side of the beam, which can be accessed via a 42 mm assembly hole, is to be secured with a washer 40x18x4 and hexagon nut M16 FK 5 (see Fig. 3).

6. Shims

Generally, the vehicle barrier system should be installed so that shims are not required. However, if shims are required due to conditions on site, then the following points must be observed:

- The regulation centre distance of the posts is to be retained as far as possible.
- If the longitudinal elements have to be sawn, it is to be ensured that the cut is made clearly.
- The cut is to be executed so that the swarf cannot damage the hot-dip galvanised sections (risk of extraneous rust or damage to the coating).
- The burrs are to be removed and the cut area is to be protected against corrosion with cold-galvanizing paint in accordance with EN ISO 1461.
- The hole pattern for joining a shim must correspond to the regulation design and the gaps to the corners may not be smaller than those of the regulation design.
- Flame cutting is generally impermissible for installation work!

7. Torques for threaded connections

Thread / strength class	Torque	
	min.	max.
M10 / 4.6	10 Nm	17 Nm
M14 / 8.8	25 Nm	135 Nm
M16 / 4.6	35 Nm	70 Nm
M16 / 8.8	35 Nm	210 Nm

It is to be ensured that a sufficiently large bearing surface is given in the clamped area for tightening unscheduled prestressed threaded connections when applying the above specified torques.

8. Conformity checks

The following checks are to be undertaken during the installation process and by way of final inspection:

- Correct alignment and bolting of the structural components
- Vertical gap between the barriers and upper edge of the tension bar and reference level
- Horizontal gap between the front edge of the protective barrier post and the respective reference line for the installation
- Continuous line of the longitudinal elements (protective barrier post, tension bar)

Suitable corrective measures are to be undertaken in the event of deviations outside the range of permissible tolerances.

It is to be checked that the system has been installed correctly in accordance with the installation instructions upon completion of the installation work and this should be documented in the acceptance certificate.

9. Clearing the construction site

All residual materials (including connecting devices), packaging and supporting timber, screw boxes, foil, packaging straps, etc. and any other rubbish must be removed from the site.

The construction site is subsequently to be swept clean.

Repairing the vehicle barrier system

All components which exhibit mechanical damage or deformation subsequent to an accident are to be replaced by new components. The installation of these components is to be undertaken in accordance with the installation instructions.

New connecting devices are generally to be used when repairing a vehicle barrier system.

Durability of corrosion protection

The vehicle barrier system's components are hot-dip galvanised in accordance with EN ISO 1461 to ensure its operational lifetime / durability of protection.

The duration of protection for galvanised coatings is defined under EN ISO 14713 and is essentially dependent on the thickness of the coating. Generally, it can be assumed that the zinc coating will erode continuously over the entire area. Due to the known effective macroclimatic corrosion load for roads, corrosion category C4, zinc corrosion amounting to 2.1 to 4.2 µm per year is to be expected. Therefore, calculating with the average zinc layer thickness of minimum 70 µm in accordance with EN ISO 1461, a protection duration of minimum 15 years is given.

Note: The above specified calculated duration of protection applies to macroclimatic effective corrosion loads only. Special macroclimatic conditions could lead to a reduced duration of protection.

Inspection and maintenance

Vehicle barrier systems manufactured by voestalpine Krems Finaltechnik GmbH are fundamentally maintenance free.

The vehicle barrier system is to be visually inspected as part of the continuous inspection trips carried out by the carriageway maintenance authority, however, this must be realised at least once per year, preferably after the winter season. In doing

so, it is to be checked, among other things, that there are no deformed segments and that the bolting is correct.

Recycling / Disposal

Dismantled vehicle barrier systems or exchanged components replaced during the repair process are to be disposed of and recycled in accordance with statutory requirements. All vehicle barrier system components manufactured by voestalpine Krems Finaltechnik GmbH are 100% recyclable.

Packaging and other waste is to be recycled or disposed of in accordance with statutory requirements.

Vehicle barrier systems manufactured by voestalpine Krems Finaltechnik GmbH do not contain toxic or potentially hazardous materials.

SAFETY BARRIERS

KREMSBARRIER RW N1

Bicycle lane barrier for pile-drivable subgrade

product specification sheet FR01/2

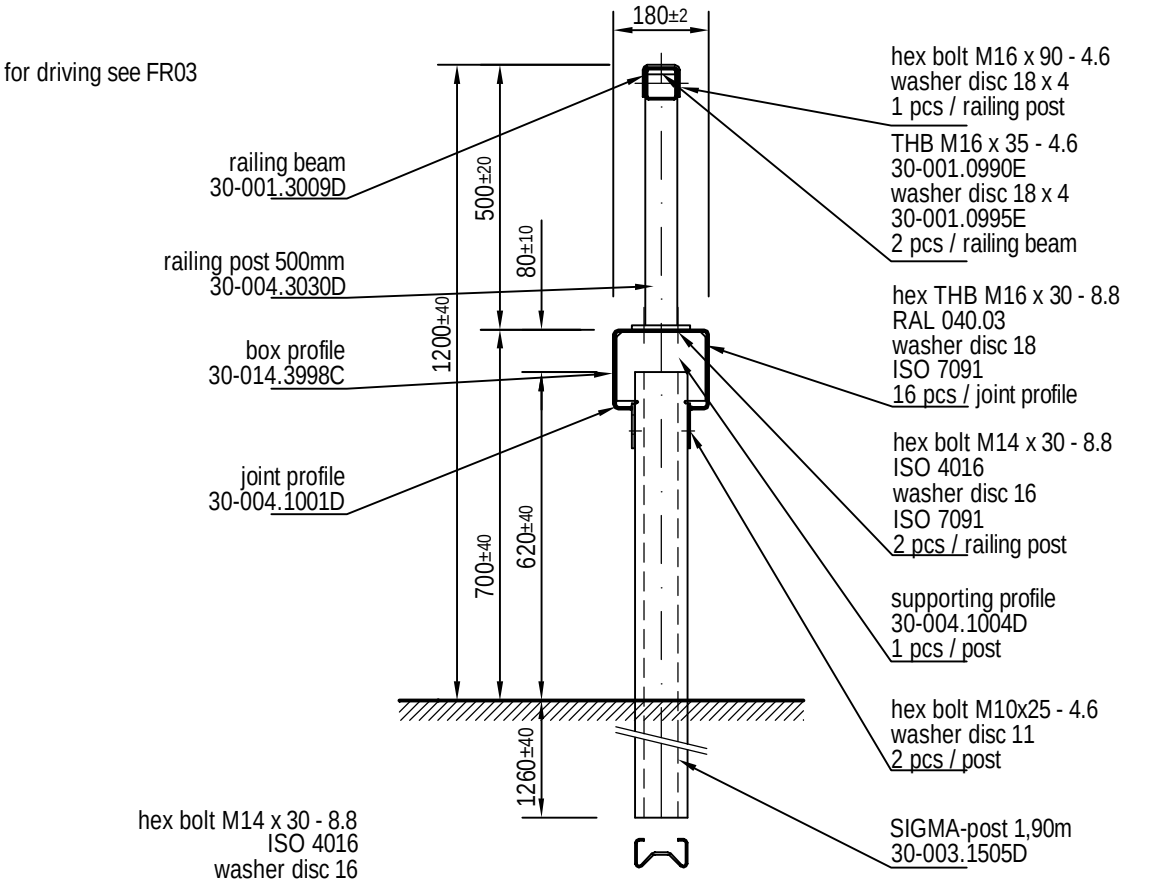

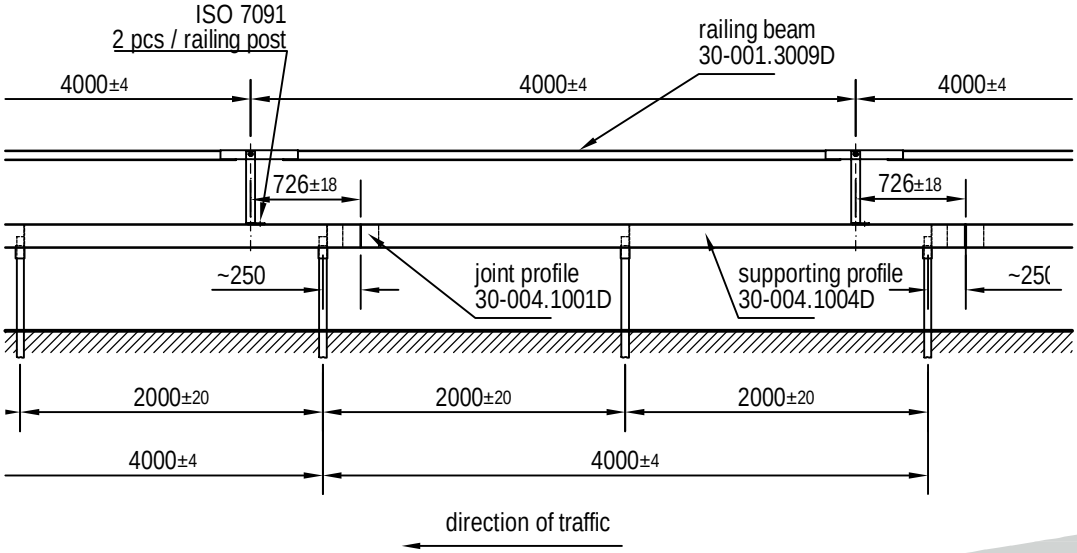

01/2015

SAFETY BARRIERS

KREMSBARRIER RW N1

Bicycle lane barrier for pile-drivable subgrade

product specification sheet FR01/3

installation drawing

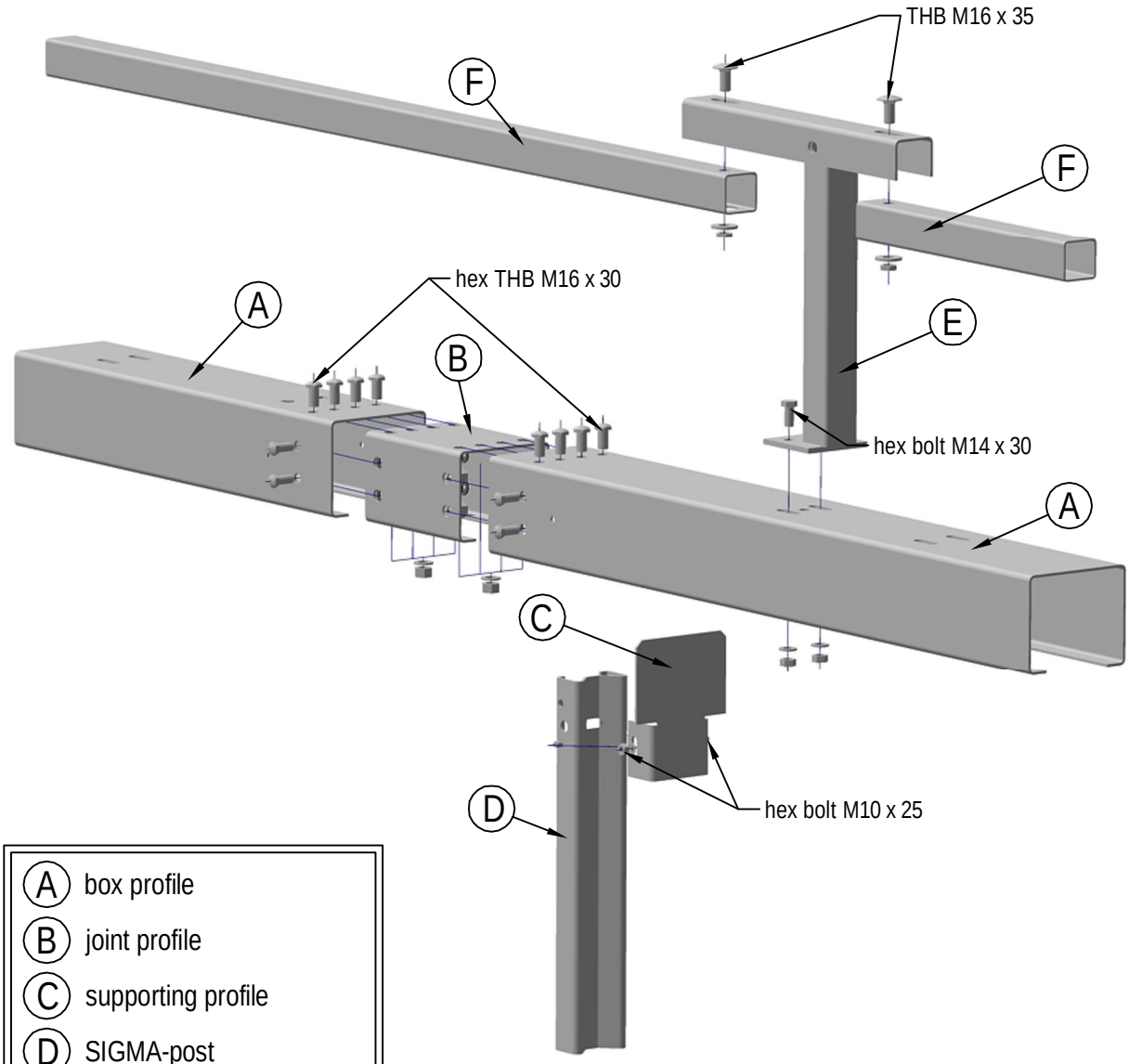

A	box profile
B	joint profile
C	supporting profile
D	SIGMA-post
E	railing post 500mm
F	railing beam

01/2015

Parts list
KREMSBARRIER RW N1

Bicycle lane barrier for pile-drivable subgrade

Requirements for a field with a 4,00 m length

part	name of the item	weight [kg]	drawing- number	material / quality	corrosion protection
1	box beam 4,00 m	68,00	30-014.3998-	S235JR	acc. to EN ISO 1461
1	joint beam.KS	3,80	30-004.1001D	S235JR	acc. to EN ISO 1461
2	sigma-post 1,90 m	14,00	30-003.1505E	S235JR	acc. to EN ISO 1461
2	supporting profile box beam	1,30	30-004.1004D	S235JR	acc. to EN ISO 1461
1	railing beam 3680	19,80	30-001.3009D	S235JR	acc. to EN ISO 1461
1	handrail post KS 500	6,40	30-004.3030D	S235JR	acc. to EN ISO 1461
2	THB M16x35-4.6 +nut	0,13	30-001.0990E	4.6	acc. to EN ISO 10684
2	washer 40x18x4	0,03	30-001.0995E	100HV	acc. to EN ISO 10684
16	hex THB M16 x 30 - 8.8	0,12	TL-SP99 Znr.162	8.8	acc. to DIN 267
16	washer 17,5	0,01	ISO 7091	100HV	acc. to EN ISO 10684
6	hex bolt M14x30-8.8 +nut	0,06	ISO 4018	8.8	acc. to EN ISO 10684
6	washer 15,5	0,01	ISO 7091	100HV	acc. to EN ISO 10684
4	hex bolt M10x25-4.6 +nut	0,04	ISO 4018	4.6	acc. to EN ISO 10684
4	washer 11	0,00	ISO 7091	100HV	acc. to EN ISO 10684

01/2015