ASSEMBLY INSTRUCTIONS

for the vehicle barrier system

KREMSBARRIER 3 RH4
for pile-drivable subgrades

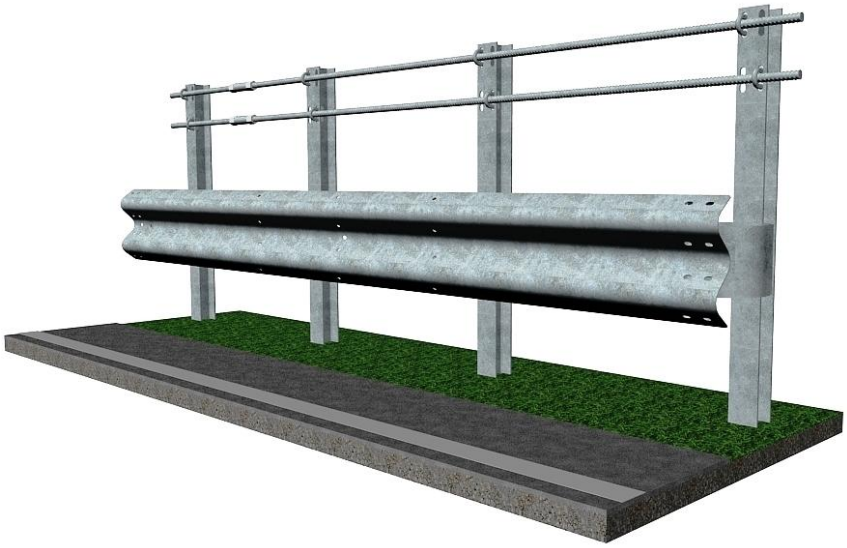

Performance class in accordance with EN 1317-2:

Containment level:	H4b
Impact severity level:	A
Working width:	W5

Production and sales:

voestalpine Krems Finaltechnik GmbH

Schmidhüttenstraße 5, 3500 Krems, Austria

T.: +43/50304/14-670

F.: +43/50304/54-628

E-Mail: info.vasts@voestalpine.com

ID: VTMA301
Version: 01/2015

Contents

Safety instructions

As working on vehicle barrier systems should generally be categorised as especially dangerous, such tasks should always be carried out under the supervision and instruction of applicably trained specialist personnel.

These assembly instructions assume that supervision and instruction is provided by such specialist personnel on-site.

All construction personnel must wear personal protective equipment in accordance with EC directive 89/686/EEC.

Proper use

The task of a vehicle barrier system is to restrain and redirect vehicles straying off of the carriageway and thereby minimise the consequences for passengers as well as for other road users and objects worthy of protection.

Note: *Vehicle barrier systems are generally to be used only in situations where straying off of the carriageway is likely to result in more severe consequences for vehicles and their passengers as well as for third parties or objects worthy of protection than a collision with the barrier system.*

Technical description of the vehicle barrier system

Performance class in accordance with ÖNORM, EN 1317-2:	
Containment level	H4b
Impact severity level / ASI	A / 1.0
Working width / level	W5 / 1.5 m
Test length	72.00 m
System dimensions	
System width	589 mm
System height	1,564 mm
Ram depth	1,136 mm

Transport

The following points are to be observed when transporting components of the vehicle barrier systems:

- A regulation load securing system is to be made available.
- When transporting on salt-treated roads, the components must be transported on enclosed / tarpaulin-covered truck trailers.
- Avoid contact with other aggressive transported materials (e.g. residual chemicals on the loading space).
- The lifting gear is to be designed for a maximum package weight of 2.5 t.

Note: A proper load securing system must also be used when transporting equipment for installation of vehicle barrier systems.

Requirements for installation

The executing contractor (=installation firm) must have the professional aptitude and general qualifications for the undertaking of such installation work.

The installation firm must be in possession of the technical equipment required for the professional and proper undertaking of the installation work. This includes, in addition to a fleet of vehicles adapted for this type of work, especially the pile-driving equipment for the required post segments with adapted drive heads and guides as well as drilling equipment, impact screwdrivers, mandrels and measuring equipment, etc.

The installation firm must maintain all relevant national and international laws, regulations, directives, etc. and ensure that the required permits are available and have been submitted in good time.

The following must be checked by the installation firm prior to the start of installation

- Possible existing installations in the area of the anchoring must be assessed and correspondingly taken into consideration
- The suitability of the subgrade (soil class, sufficient bore depth, evenness, etc.) is to be checked.
- The definitive reference line must be marked for installation of the vehicle barrier system.
- The delivery of materials must be checked for correctness and completeness and complaints must be immediately forwarded to the supplier.
- It must be ensured that the building site is properly secured.

The customer is to be informed immediately in writing in the event that deviations are determined and the matter is to be clarified.

If components for the vehicle barrier system are to be intermediately stored, then the following warehouse conditions are to be fulfilled:

- The storage area must be capable of bearing the load and must be accessible with an HGV truck.
- Galvanised components may not be stored on tall, damp grass, in standing water or mud.
- The packages are to be stored in the original packaging on wooden slats with approximately 150 mm gap to the ground.
- The components should be stored at a slight angle, so that water can drain off.
- The formation of puddles (collection of moisture) is to be avoided.
- Foil used for purposes of securing the layers during transportation is to be removed.
- The storage area may not be treated with defrosting agents.

Long-term storage of bundled components outdoors is to be avoided.

<u>Suitable subgrade</u>

The subgrade is considered suitable for the installation of the vehicle barrier system if the following conditions are fulfilled:

- Soil classes 3, 4 and 5 of ÖNORM B 2205 and compacted subgrade which can be graded into these soil classes.
- Degree of compaction $D_{pr} \geq 97\%$
- The subgrade is suitable for pile driving.

  Soil classes 1, 3, 4 and 5 of ÖNORM B 2205 and compacted subgrades which can be graded into these soil classes and which contain no blocks are suitable for pile driving.

Note: *If the subgrade is unsuitable for pile driving, then there is the option to drill boreholes to the required depth or install suitable empty pipes, which can subsequently be filled and compacted with suitable material.*

Installation of the vehicle barrier system in accordance with data sheets A301/2 and A301/3 (see appendix)

It is not necessary to pre-assembly the vehicle barrier system components in the factory.

Due to the fact that the vehicle barrier system is not pre-stressed, the ambient temperature at the time of installation is irrelevant.

1. Ramming I120 posts

The minimum 2,700 mm long I120 post is to be driven vertically into the subgrade with a suitable pile driver, so that the upper edge of the post section is 1,564 mm above the reference level.

The bore holes must be on the upper side of the posts and on the side facing the traffic.

The pile driver must be equipped with a suitable drive head to fit the IPBl120 section, in order to provide precise guidance and to prevent deformation or damage to the hot-dip galvanised coating on the post head.

2. Mounting the tension rod diameter 32

The two tension rod diameter 32 mm are bolted on the carriageway-side flange of the IPBl120 post, dependent on the direction of traffic flow, with one U-bolt M20 FK 8.8 per post (see Fig. 1).

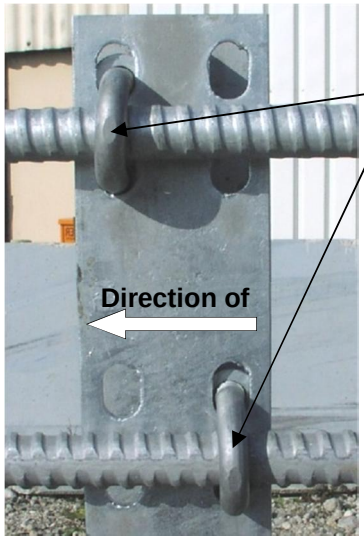

Figure 1

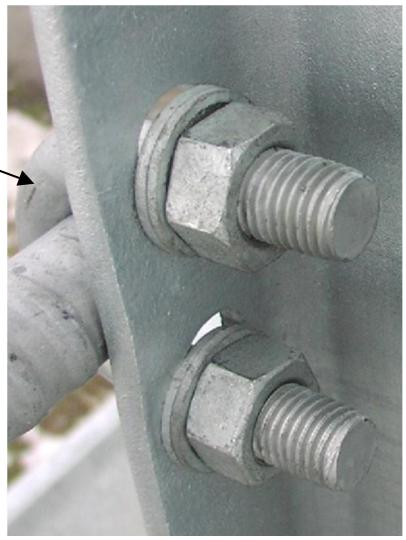

Figure 2

In order to do so, the U-bolts are placed over the tension rod and inserted into the pair of elongated holes 24x36 mm in the flange of the post (see Fig. 2). Each U-bolt is secured with four washers 37x4 and two hexagon nuts M20 FK 8 (see Fig. 2).

As seen from the direction of travel, the U-bolt of the lower tension bar is to be aligned in front, and the upper one aligned after the bar of the post (see Fig. 1).

The tension rod diameter 32 mm are to be placed together and connected with a 140 mm long round sleeve. The round sleeve must sit centrally over the joint of the tension rod. The bond length of the tension rod in the round sleeve of minimum 65 mm is to be continuously checked.

In order to secure the round sleeve, locknuts are fitted to both sides (see Fig. 3). These locknuts are to be tightened to a sufficient torque so that they cannot be released by hand.

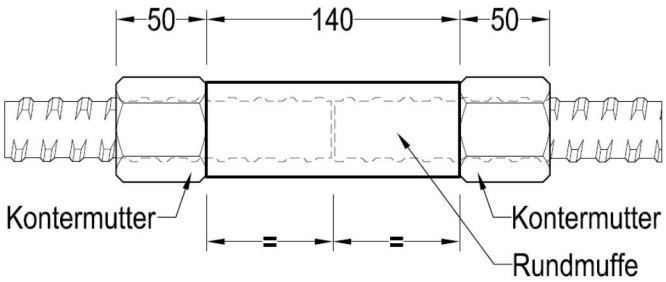

Figure 3

The tension bar, round sleeve and locknuts have left-hand threads.

3. Install damping semi-shells S3

In each case, two damping semi-shells are to be placed together so that a cylinder is formed with two flattened sides and the hole patterns are congruent (with the exception of the manufacturer's emblem).

The cylinder is secured with custom bolts M16x40 FK 6.8, which are inserted through the elongated holes 18x36 mm in post flange and the 18 mm diameter bore holes of the semi-shells. Subsequently they are each fastened in place with a washer 40x18x4 and hexagon nut M16 FK 5 on the inside of the cylinder (see Fig. 4).

Figure 4

Figure 5

Which of the two damping semi-shells rests against the post section has no influence of the functionality of the system.

4. Install retaining bracket S3

The retaining bracket S3 is to be aligned in front of the damping semi-shells so that the narrow side of the keyholes point upwards and the flange projects in the direction of the carriageway (see Fig. 5).

For purposes of fastening, two coach bolts M10x30 FK 4.6 with pre-mounted washers 11 are inserted through the narrow side of the keyhole and through the congruent elongated holes of the damping semi-shells. A gusset plate 120x50x2 with two axially aligned bore holes 12 mm diameter is placed on the inside of the damping semi-shells onto the two bolts M10x30 FK 4.6 and fixed in place with two hexagon nuts M10 FK 5 (see Fig. 5 and 6).

Figure 6

5. Install S3 guardrail (crash barrier)

The guardrails are to be overlapped in the jointed area in accordance with the direction of traffic, so that vehicles cannot get caught up on them. The carriageway facing the respective guard rail ends in the joint region (upper part) is indicated by drop-shaped holes and is additionally marked with ⌂ on voestalpine crash barriers. Elongated holes in the guard rail end jointed areas (lower part) indicate the side facing away from the traffic.

The guardrails are bolted in place to each retaining bracket S3 (every ~1.333 mm) with two custom bolts M16 FK 6.8 on each side of the guard rails (see Fig. 7).

Figure 7

The guardrail joint is additionally secured with six custom bolts M16 FK 6.8. It is to be ensured when tightening the hexagon nuts M16 FK 6 that the drop-shaped anti-twist pro-tection for the bolt head is correctly positioned in the drop-shaped hole of the guardrail. A washer 40x18x4 is to be fitted under each hexagon nut M16.

Custom bolts M16 FK 6.8 of lengths 30 and 40 mm are used. Custom bolt M16x40 is only to be used for bolting the damping brackets in the jointed area of the guard rails.

6. Shims

Generally, the vehicle barrier system should be installed so that shims are not required. However, if shims are required due to conditions on site, then the following points must be observed:

- The regulation centre distance of the posts is to be retained as far as possible.
- If the longitudinal elements have to be sawn, it is to be ensured that the cut is made clearly.
- The cut is to be executed so that the swarf cannot damage the hot-dip galvanised sections (risk of extraneous rust or damage to the coating).

- The burrs are to be removed and the cut area is to be protected against corrosion with cold-galvanizing paint in accordance with EN ISO 1461.
- The hole pattern for joining a shim must correspond to the regulation design and the gaps to the corners may not be smaller than those of the regulation design.
- Flame cutting is generally impermissible for installation work!

7. Torques for threaded connections

Thread / strength class	Torque	
	min.	max.
M10 / 4.6	10 Nm	17 Nm
M16 / 6.8	35 Nm	150 Nm
M20 / 8.8	150 Nm	460 Nm

It is to be ensured that a sufficiently large bearing surface is given in the clamped area for tightening unscheduled prestressed threaded connections when applying the above specified torques.

8. Conformity checks

The following checks are to be undertaken during the installation process and by way of final inspection:

- Correct alignment and bolting of the structural components
- Vertical gap between the barriers and upper edge of the tension bar and reference level
- Horizontal gap between the front edge of the protective barrier post and the respective reference line for the installation
- Continuous line of the longitudinal elements (protective barrier post, tension bar)

Suitable corrective measures are to be undertaken in the event of deviations outside the range of permissible tolerances.

It is to be checked that the system has been installed correctly in accordance with the installation instructions upon completion of the installation work and this should be documented in the acceptance certificate.

9. Clearing the construction site

All residual materials (including connecting devices), packaging and supporting timber, screw boxes, foil, packaging straps, etc. and any other rubbish must be removed from the site. The construction site is subsequently to be swept clean.

Repairing the vehicle barrier system

All components which exhibit mechanical damage or deformation subsequent to an accident are to be replaced by new components. The installation of these components is to be undertaken in accordance with the installation instructions.

New connecting devices are generally to be used when repairing a vehicle barrier system.

Durability of corrosion protection

The vehicle barrier system's components are hot-dip galvanised in accordance with EN ISO 1461 to ensure its operational lifetime / durability of protection.

The duration of protection for galvanised coatings is defined under EN ISO 14713 and is essentially dependent on the thickness of the coating. Generally, it can be assumed that the zinc coating will erode continuously over the entire area. Due to the known effective macroclimatic corrosion load for roads, corrosion category C4, zinc corrosion amounting to 2.1 to 4.2 µm per year is to be expected. Therefore, calculating with the average zinc layer thickness of minimum 70 µm in accordance with EN ISO 1461, a protection duration of minimum 15 years is given.

Note: The above specified calculated duration of protection applies to macroclimatic effective corrosion loads only. Special macroclimatic conditions could lead to a reduced duration of protection.

Inspection and maintenance

Vehicle barrier systems manufactured by voestalpine Krems Finaltechnik GmbH are fundamentally maintenance free.

The vehicle barrier system is to be visually inspected as part of the continuous inspection trips carried out by the carriageway maintenance authority, however, this must be realised at least once per year, preferably after the winter season. In doing so, it is to be checked, among other things, that there are no deformed segments and that the bolting is correct.

Recycling / Disposal

Dismantled vehicle barrier systems or exchanged components replaced during the repair process are to be disposed of and recycled in accordance with statutory requirements. All vehicle barrier system components manufactured by voestalpine Krems Finaltechnik GmbH are 100% recyclable.

Packaging and other waste is to be recycled or disposed of in accordance with statutory requirements.

Vehicle barrier systems manufactured by voestalpine Krems Finaltechnik GmbH do not contain toxic or potentially hazardous materials.

SAFETY BARRIERS

KREMSBARRIER 3 RH4

Road Restaint System suitable
for pile driving ground conditions

product specifications Sheet A301/2

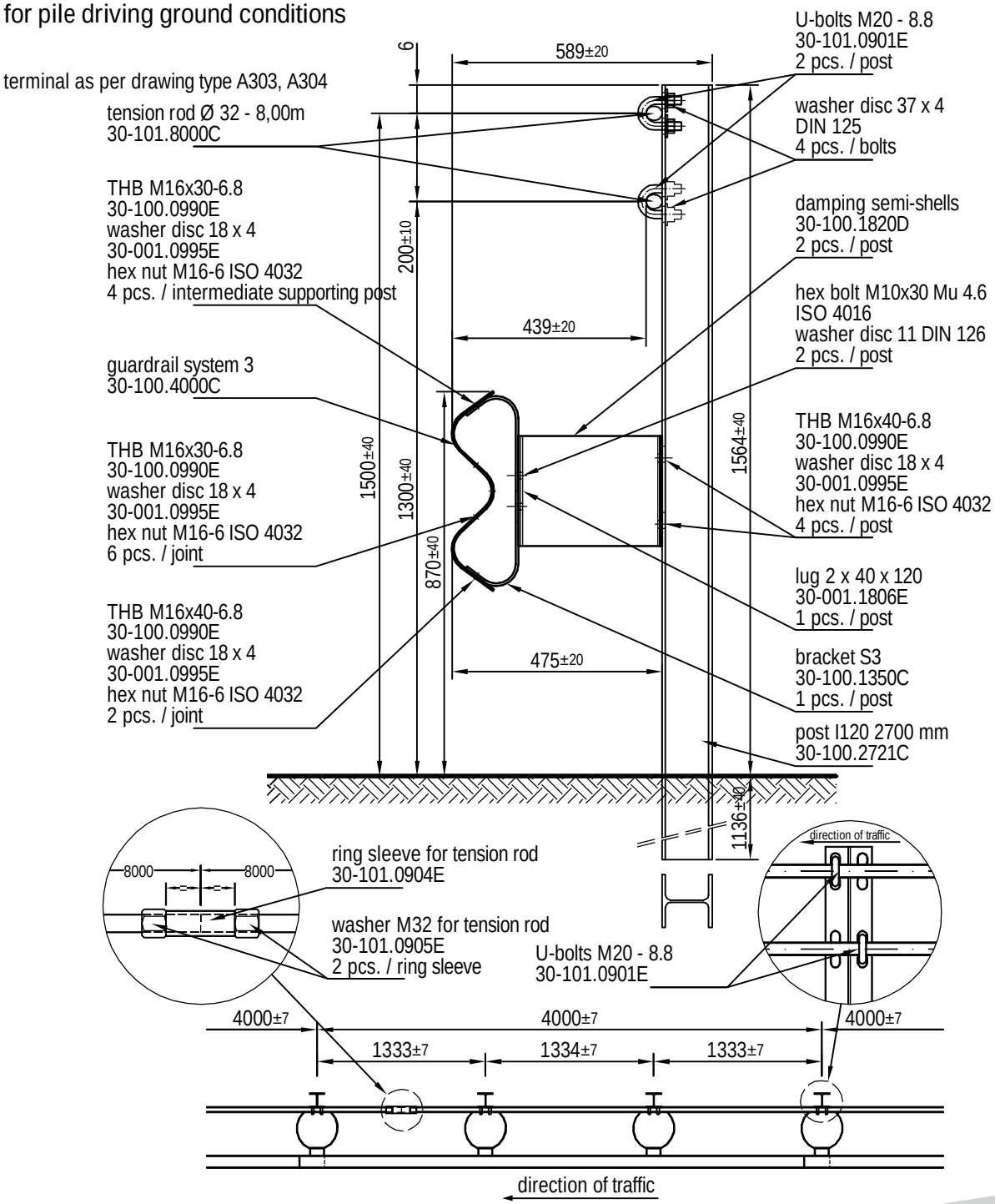

01/2015

SAFETY BARRIERS

KREMSBARRIER 3 RH4

Road Restaint System suitable
for pile driving ground conditions

installation drawing

product specifications Sheet A301/3

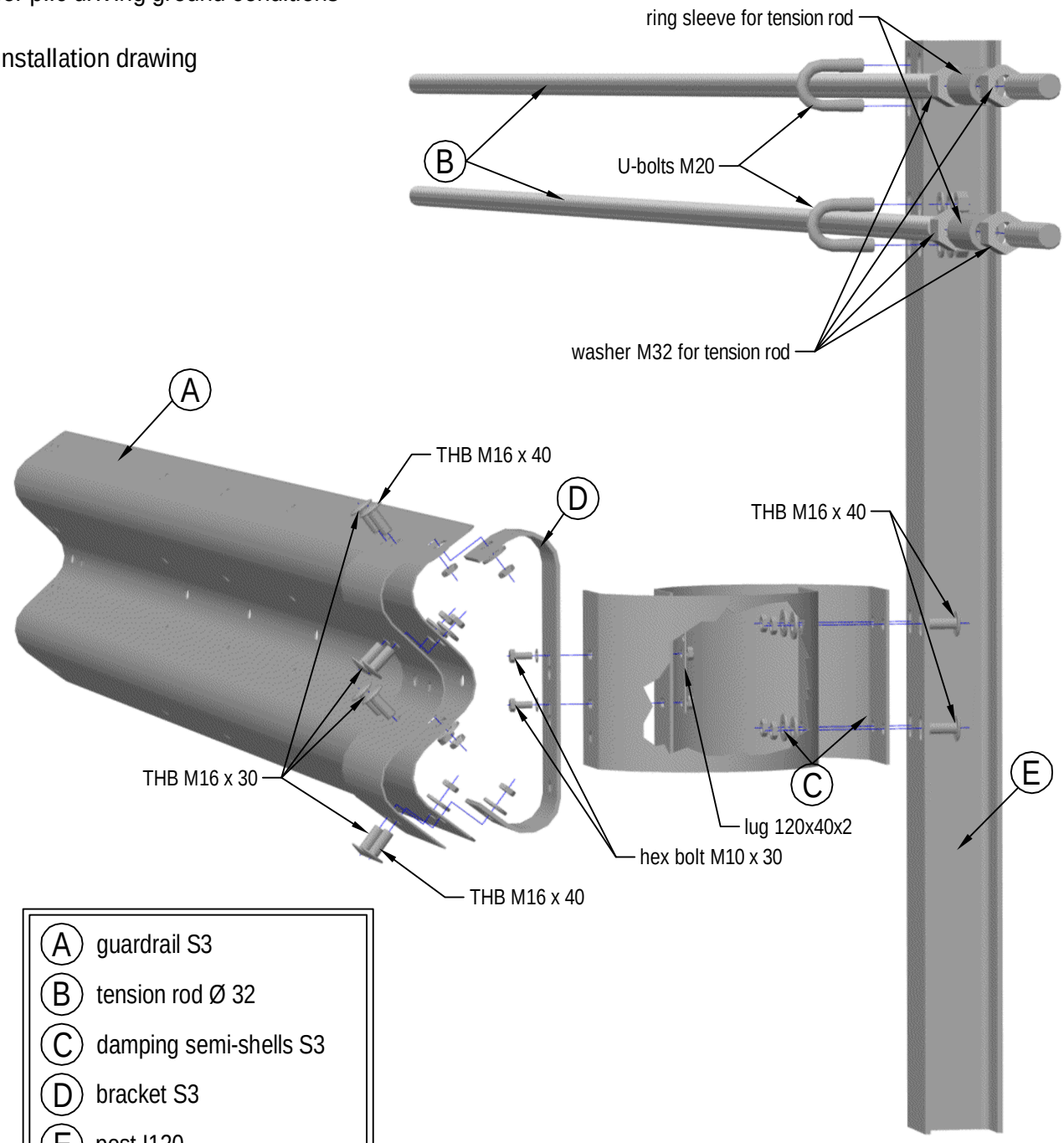

A	guardrail S3
B	tension rod Ø 32
C	damping semi-shells S3
D	bracket S3
E	post I120

01/2015

SAFETY BARRIERS

Parts list
KREMSBARRIER 3 RH4

Road Restaint System suitable
for pile driving ground conditions

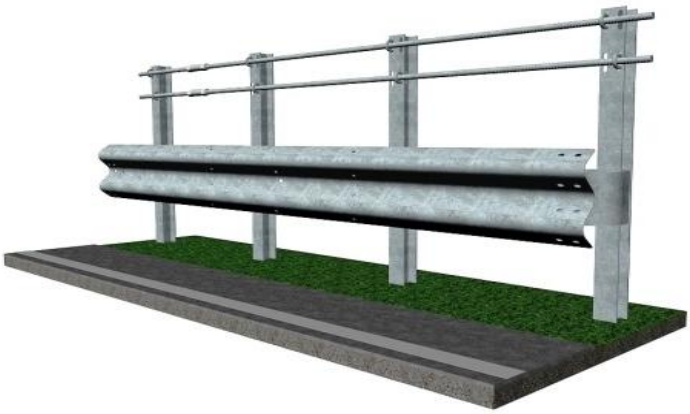

Requirements for a field with a 4,00 m length

part	name of the item	weight [kg]	drawing- number	material / quality	corrosion protection
1	guardrail S3 4,00	61,72	30-100.4000-C	S355JO	acc. to EN ISO 1461
3	retaining bracket S3	3,45	30-100.1350C	S235JR	acc. to EN ISO 1461
3	lug 120x40x2	0,10	30-001.1806E	S235JR	acc. to EN ISO 1461
6	damping semi-shells S3	6,40	30-100.1820D	S355JO	acc. to EN ISO 1461
3	IBL120-post 2,70m	55,88	30-100.2721D	S235JR	acc. to EN ISO 1461
1	tension rod ø32 - 8,00m	52,48	30-101.8000D	BSt 500 S	acc. to EN ISO 1461
2	nut M32 for tension rod	0,48	30-101.0905E	S355J2	acc. to EN ISO 1461
1	ring sleeve for tension rod	1,31	30-101.0904E	S355J2	acc. to EN ISO 1461
6	U-bolt M20-8.8 U	0,42	30-101.0901E	8.8	acc. to EN ISO 10684
24	washer 37x21x3	0,02	ISO 7089	100HV	acc. to EN ISO 10684
12	hex nut M20-8	0,06	ISO 4032	8	acc. to EN ISO 10684
10	THB M16x30-6.8 with nose +nut	0,08	30-100.0990E	6.8	acc. to EN ISO 10684
14	THB M16x40-6.8 with nose +nut	0,10	30-100.0990E	5.6	acc. to EN ISO 10684
24	washer 40x18x4	0,03	30-001.0995E	100HV	acc. to EN ISO 10684
6	hex bolt M10x30-4.6 +nut	0,04	ISO 4016	6.8	acc. to EN ISO 10684
6	washer 11	0,00	ISO 7091	100HV	acc. to EN ISO 10684

01/2015