ASSEMBLY INSTRUCTIONS

for the vehicle barrier system

KREMSBARRIER 1 RH3
on artificial structures

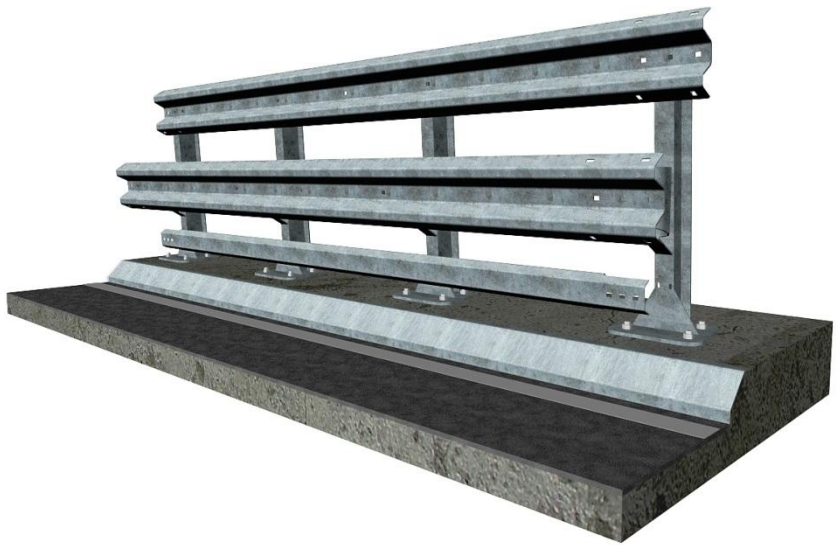

Performance class in accordance with EN 1317-2:

Containment level:	H3
Impact severity level:	B
Working width:	W5

Production and sales:

voestalpine Krems Finaltechnik GmbH

Schmidhüttenstraße 5, 3500 Krems, Austria

T.: +43/50304/14-670

F.: +43/50304/54-628

E-Mail: info.vasts@voestalpine.com

ID: VTMB105

Version: 01/2015

Contents

Safety instructions

As working on vehicle barrier systems should generally be categorised as especially dangerous, such tasks should always be carried out under the supervision and instruction of applicably trained specialist personnel.

These assembly instructions assume that supervision and instruction is provided by such specialist personnel on-site.

All construction personnel must wear personal protective equipment in accordance with EC directive 89/686/EEC.

Proper use

The task of a vehicle barrier system is to restrain and redirect vehicles straying off of the carriageway and thereby minimise the consequences for passengers as well as for other road users and objects worthy of protection.

Note: *Vehicle barrier systems are generally to be used only in situations where straying off of the carriageway is likely to result in more severe consequences for vehicles and their passengers as well as for third parties or objects worthy of protection than a collision with the barrier system.*

Technical description of the vehicle barrier system

Performance class in accordance with ÖNORM, EN 1317-2:	
Containment level	H3
Impact severity level / ASI	B / 1.3
Working width / level	W5 / 1.7 m
Test length	49.40 m
System dimensions	
System width	640 mm
System height	1,400 mm
Bore depth	170 mm

Transport

The following points are to be observed when transporting components of the vehicle barrier systems:

- A regulation load securing system is to be made available.
- When transporting on salt-treated roads, the components must be transported on enclosed / tarpaulin-covered truck trailers.
- Avoid contact with other aggressive transported materials (e.g. residual chemicals on the loading space).
- The lifting gear is to be designed for a maximum package weight of 2.5 t.

Note: A proper load securing system must also be used when transporting equipment for installation of vehicle barrier systems.

Requirements for installation

The executing contractor (=installation firm) must have the professional aptitude and general qualifications for the undertaking of such installation work.

The installation firm must be in possession of the technical equipment required for the professional and proper undertaking of the installation work. This includes, in addition to a fleet of vehicles adapted for this type of work, especially the pile-driving equipment for the required post segments with adapted drive heads and guides as well as drilling equipment, impact screwdrivers, mandrels and measuring equipment, etc.

The installation firm must maintain all relevant national and international laws, regulations, directives, etc. and ensure that the required permits are available and have been submitted in good time.

The following must be checked by the installation firm prior to the start of installation

- Possible existing installations in the area of the anchoring must be assessed and correspondingly taken into consideration
- The suitability of the subgrade (soil class, sufficient bore depth, evenness, etc.) is to be checked.
- The definitive reference line must be marked for installation of the vehicle barrier system.
- The delivery of materials must be checked for correctness and completeness and complaints must be immediately forwarded to the supplier.
- It must be ensured that the building site is properly secured.

The customer is to be informed immediately in writing in the event that deviations are determined and the matter is to be clarified.

If components for the vehicle barrier system are to be intermediately stored, then the following warehouse conditions are to be fulfilled:

- The storage area must be capable of bearing the load and must be accessible with an HGV truck.
- Galvanised components may not be stored on tall, damp grass, in standing water or mud.
- The packages are to be stored in the original packaging on wooden slats with approximately 150 mm gap to the ground.
- The components should be stored at a slight angle, so that water can drain off.
- The formation of puddles (collection of moisture) is to be avoided.
- Foil used for purposes of securing the layers during transportation is to be removed.
- The storage area may not be treated with defrosting agents.

Long-term storage of bundled components outdoors is to be avoided.

Suitable subgrade

In the event of a vehicle impact, the vehicle barrier system and the vehicle itself transfers forces (nominal characteristic values) into the subgrade (structure). These forces are also dependent on the alignment of the barrier system to the structure.

The subgrade is considered suitable for the installation of the vehicle barrier system if the following conditions are fulfilled:

- Conduction of the characteristic values is ensured.
- Concrete strength minimum C25/30
- Reinforcement corresponds to the structural requirements
- Levelness of the surface in the area of anchorage:
  maximum deviation 5 mm over 0.50 m batten length

Note: The vehicle barrier system can also be anchored on steel structures, if the conduction of aligned characteristic forces is correspondingly ensured. The alignment of anchoring for the

vehicle barrier system on steel constructions must always be agreed with the manufacturer.

Installation of the vehicle barrier system in accordance with data sheets B105/2 and B105/3 (see appendix)

It is not necessary to pre-assembly the vehicle barrier system components in the factory.

Due to the fact that the vehicle barrier system is not pre-stressed, the ambient temperature at the time of installation is irrelevant.

1. Establish anchoring

Two anchoring systems are available for anchoring the IPE160 baseplate posts:

Anchoring system I: Anchoring of each IPE160 post with three concrete bolts TSM B16x220 in accordance with Data Sheet TSM 220 (see appendix).

Anchoring system II: Anchoring of each IPE160 post with three composite adhesive anchors M24x220 in accordance with Data Sheet Composite Adhesive Anchor M24x220 (see appendix).

The anchoring points are to be selected in accordance with the direction of traffic flow (see Fig. 1).

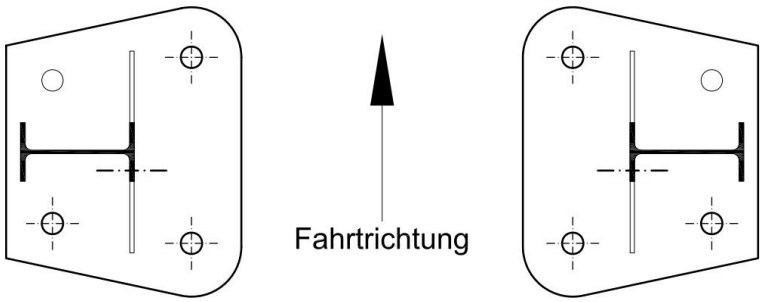

Figure 1

It is recommended to position the bore holes for the anchoring pairs with the help of a drilling template, in order to ensure precise spacing for the anchorage.

The bore holes are to be executed normally, to the installation surface. The bore depth amounts to 170±3 mm. Using a drill stand attachment with depth gauge ensures that the bore holes are executed precisely.

The regulation centre distance of the anchoring groups (= post spacing) amounts to 1,267 mm.

Figure 2

2. Offset IPE160 baseplate post

The IPE160 baseplate posts are to be aligned so that the welded brackets on the IPE160 posts point towards the traffic.

It is to be ensured that the IPE160 baseplate posts are positioned within the anchoring groups so that the anchor sit centrally in the baseplate bore holes diameter 30 mm.

In order to **anchor** the IPE160 baseplate posts with **concrete bolts TSM B16x220**, the posts are each secured to the specified torque with two washers 50x19x4 and hexagon nuts M18 FK 8 for each concrete bolt.

In order to **anchor** the IPE160 baseplate posts with **composite adhesive anchors M24x220**, the posts are each secured to the specified torque with washers ISO 7089-24-200 HV and hexagon nuts M24 FK 8 for each pair of composite adhesive anchors.

The lateral inclination of the installation surface is to be taken into consideration in terms of the angle between the baseplate and the post, so that the V140 post deviation from perpendicular amounts to no more than 2.5%.

The longitudinal gradient of the installation surface is generally disregarded.

Varying curb heights are to be taken into consideration in accordance with national regulations.

3. Install sliding profile S1

The sliding profiles are to be aligned on the side of the posts pointing towards the traffic, so that sides lay flush with the posts (see Fig. 2).

The sliding profiles are attached to each IPE160 post. In order to do so, a coach bolt M10x25 FK 4.6 is fed through the inner side of the sliding profile, through the elongated hole 60x12 mm in the upper flank of the sliding profile and through the elongated hole 30x12 mm of the IPE160 post. It is then fixed in place with a washer 11 (washer ISO 7091-10-100HV) and hexagon nut M10 FK 5.

The guardrails are to be overlapped in the jointed area in accordance with the direction of traffic, so that vehicles cannot get caught up on them.

The carriageway facing the respective slide profiles in the joint region (upper part) is indicated by the stamped plate marked with ⌂ on voestalpine crash barriers. The sliding profile joint is to be aligned, as seen from the direction of travel ~180 mm after the post axis and secured in place with three coach bolts M16x35 FK 4.6, washers 40x18x4 and nuts M16 FK 5 (see Fig. 2).

4. Mounting the "round damping element" (round damper)

The round damper is to be bolted to the welded bracket on the IPE160 baseplate post. In order to do so, two coach bolts M16x35 FK 4.6 are fed through the inside of the round damper, out through the axially aligned keyholes (narrow side up) in the round damper and inserted through the elongated holes 18x30 mm in the bracket. They are then fixed in place with washers 40x18x4 and hexagon nutsM16 FK 5 (see Fig. 3).

Figure 3

Figure 4

5. Mounting extension profiles for the upper guard rail belt

The extension profile is to be aligned as a continuous belt between the guard rail belt and the IPE160 posts.

The trapezoidal cross-section of the extension profile surrounds the centre of the guard rail. The rectangular holes 18x25 mm in the guard rail axis and extension profiles must align.

The overlapping of the extension profiles is to be executed in accordance with the overlapping of the guard rails. The two drilled 18 mm diameter holes indicate that the extension profiles in the jointed area (upper part) are facing the respective carriageway (see Fig. 4).

The extension profiles are to be mounted together with the guard rails and are fixed in place with the bolted unions in the guard rail axis.

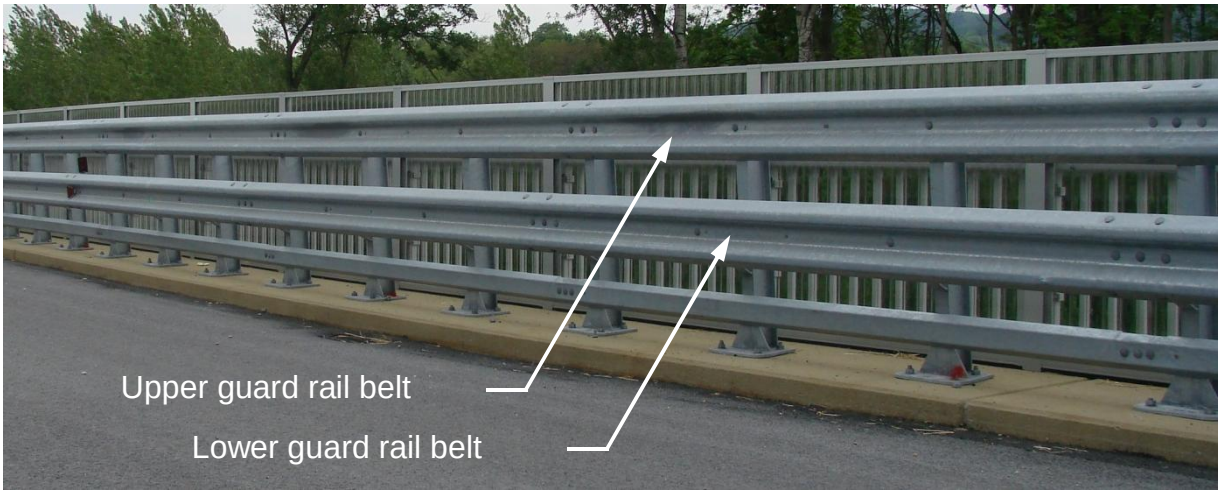

Figure 5

6. Mounting guard rails (barriers) S1 for the upper guard rail belt

The guardrails S1 are to be overlapped in the jointed area in accordance with the direction of traffic, so that vehicles cannot get caught up on them (see Fig. 4 and 5). The drilled 9 mm diameter hole indicates that the guard rail in the joint region (upper part) is facing the respective carriageway.

In order to be able to overlap the guardrail in the jointed area, the carriageway side of the guardrail ends (lower part) are goosenecked.

The guardrails are bolted together with the extension profiles on the guardrail axis at each IPE160 post (every ~1.267 mm). In order to do so, a coach bolt M16x50 FK 4.6 is fed through the axially aligned bore holes in the guardrail S1 and the elongated hole 20x40 in front of the extension profile bar on the IPE160 post, as viewed in the direction of traffic. It is then secured in place with a hexagon nut M16 FK 5 (see Fig. 1 and 4).

The guardrail joint is additionally secured with six coach bolts M16x35 FK 4.6. It is to be ensured when tightening the hexagon nuts M16 FK 5 that the square-shaped anti-twist protection for the bolt head is correctly positioned to the guardrail.

A washer 40x18x4 is to be aligned under each hexagon nut M16 FK 5. The exception to this is the four off-centre bolts in the crash barrier joint, where two reinforcement flanks are to be installed instead of the washers 40x18x4 (see fig. 4).

7. Mounting extension profiles for the lower guard rail belt

The extension profile is to be aligned as a continuous belt between the guard rail belt and the IPE160 posts.

The trapezoidal cross-section of the extension profile surrounds the centre of the guard rail. The rectangular holes 18x25 mm in the guard rail axis and extension profiles must align.

The overlapping of the extension profiles is to be executed in accordance with the overlapping of the guard rails. The two drilled 18 mm diameter holes indicate that the extension profiles in the jointed area (upper part) are facing the respective carriageway (see Fig. 6).

The extension profiles are to be mounted together with the guard rails and are fixed in place with the bolted unions in the guard rail axis.

8. Mounting S1 guardrail (crash barrier) for the lower guard rail belt

The guardrails S1 are to be overlapped in the jointed area in accordance with the direction of traffic, so that vehicles cannot get caught up on them. The drilled 9 mm diameter hole indicates that the guard rail in the joint region (upper part) is facing the respective carriageway. In order to be able to overlap the guardrail in the jointed area, the carriageway side of the guardrail ends (lower part) are goosenecked.

The guardrails are bolted in place together with the extension profiles to the guard rail axis on each round damper (every ~1.267 mm) with a coach bolt M16x50 FK 4.6.

Figure 6

The guardrail joint is additionally secured with six coach bolts M16x35 FK 4.6. It is to be ensured when tightening the hexagon nuts M16 FK 5 that the square-shaped anti-twist protection for the bolt head is correctly positioned to the guardrail.

A washer 40x18x4 is to be aligned under each hexagon nut M16 FK 5. The exception to this is the four off-centre bolts in the crash barrier joint, where two reinforcement flanks are to be installed instead of the washers 40x18x4 (see fig. 6).

9. Shims

Generally, the vehicle barrier system should be installed so that shims are not required. However, if shims are required due to conditions on site, then the following points must be observed:

- The regulation centre distance of the posts is to be retained as far as possible.
- If the longitudinal elements have to be sawn, it is to be ensured that the cut is made clearly.
- The cut is to be executed so that the swarf cannot damage the hot-dip galvanised sections (risk of extraneous rust or damage to the coating).
- The burrs are to be removed and the cut area is to be protected against corrosion with cold-galvanizing paint in accordance with EN ISO 1461.
- The hole pattern for joining a shim must correspond to the regulation design and the gaps to the corners may not be smaller than those of the regulation design.
- Flame cutting is generally impermissible for installation work!

10. Torques for threaded connections

Thread / strength class	Torque	
	min.	max.
M10 / 4.6	10 Nm	17 Nm
M16 / 4.6	35 Nm	70 Nm
M18 / 8.8	80 Nm	330 Nm
M24 / 8.8	110 Nm	500 Nm

It is to be ensured that a sufficiently large bearing surface is given in the clamped area for tightening unscheduled prestressed threaded connections when applying the above specified torques.

11. Dilating construction in the area of carriageway transitions

The dilating construction enables the absorption of temperature-related movement within the bridge structure.

The design of the dilating construction for the vehicle barrier system is dependent on the functionality of the barrier system and the amount of expansion to be accommodated (e.g. ±100 mm). This is to be discussed with the manufacturer.

12. Conformity checks

The following checks are to be undertaken during the installation process and by way of final inspection:

- Correct alignment and bolting of the structural components
- Vertical gap between the barriers and upper edge of the tension bar and reference level
- Horizontal gap between the front edge of the protective barrier post and the respective reference line for the installation
- Continuous line of the longitudinal elements (protective barrier post, tension bar)

Suitable corrective measures are to be undertaken in the event of deviations outside the range of permissible tolerances.

It is to be checked that the system has been installed correctly in accordance with the installation instructions upon completion of the installation work and this should be documented in the acceptance certificate.

13. Clearing the construction site

All residual materials (including connecting devices), packaging and supporting timber, screw boxes, foil, packaging straps, etc. and any other rubbish must be removed from the site.

The construction site is subsequently to be swept clean.

Repairing the vehicle barrier system

All components which exhibit mechanical damage or deformation subsequent to an accident are to be replaced by new components. The installation of these components is to be undertaken in accordance with the installation instructions.

New connecting devices are generally to be used when repairing a vehicle barrier system.

Durability of corrosion protection

The vehicle barrier system's components are hot-dip galvanised in accordance with EN ISO 1461 to ensure its operational lifetime / durability of protection.

The duration of protection for galvanised coatings is defined under EN ISO 14713 and is essentially dependent on the thickness of the coating. Generally, it can be assumed that the zinc coating will erode continuously over the entire area. Due to the known effective macroclimatic corrosion load for roads, corrosion category C4, zinc corrosion amounting to 2.1 to 4.2 µm per year is to be expected. Therefore, calculating with the average zinc layer thickness of minimum 70 µm in accordance with EN ISO 1461, a protection duration of minimum 15 years is given.

Note: The above specified calculated duration of protection applies to macroclimatic effective corrosion loads only. Special macroclimatic conditions could lead to a reduced duration of protection.

Inspection and maintenance

Vehicle barrier systems manufactured by voestalpine Krems Finaltechnik GmbH are fundamentally maintenance free.

The vehicle barrier system is to be visually inspected as part of the continuous inspection trips carried out by the carriageway maintenance authority, however, this must be realised at least once per year, preferably after the winter season. In doing so, it is to be checked, among other things, that there are no deformed segments and that the bolting is correct.

Recycling / Disposal

Dismantled vehicle barrier systems or exchanged components replaced during the repair process are to be disposed of and recycled in accordance with statutory requirements. All vehicle barrier system components manufactured by voestalpine Krems Finaltechnik GmbH are 100% recyclable.

Packaging and other waste is to be recycled or disposed of in accordance with statutory requirements.

Vehicle barrier systems manufactured by voestalpine Krems Finaltechnik GmbH do not contain toxic or potentially hazardous materials.

SAFETY BARRIERS

KREMSBARRIER 1 RH3

Roadside Restraint System with lower guardrail on civil structures

product specification sheet B105/2

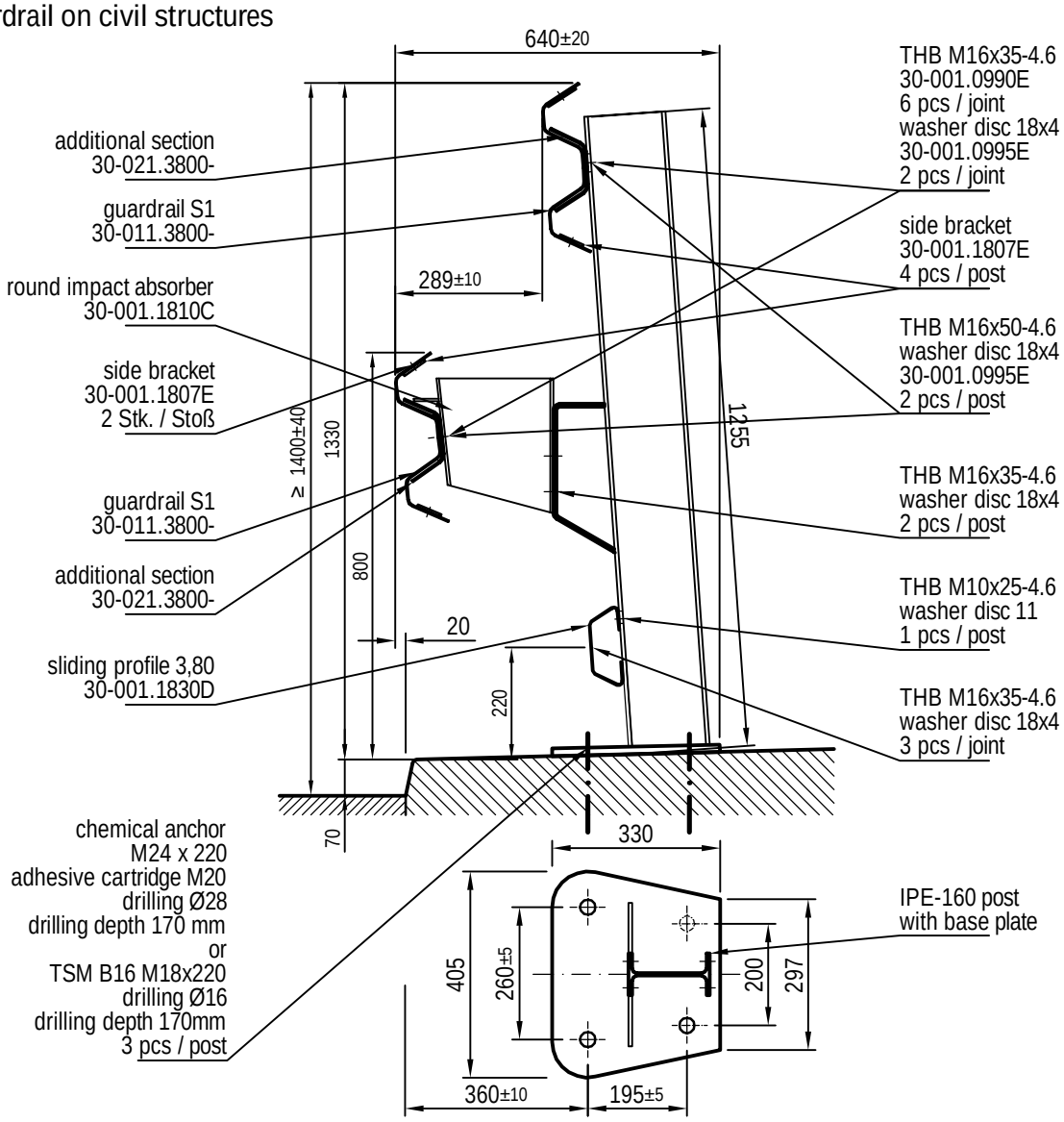

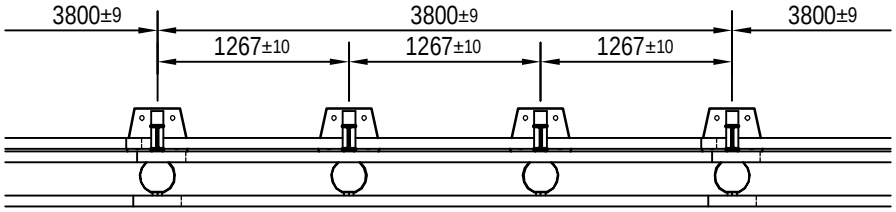

01/2015

SAFETY BARRIERS

KREMSBARRIER 1 RH3

Roadside Restraint System with lower guardrail on civil structures

product specification sheet B105/3

installation drawing

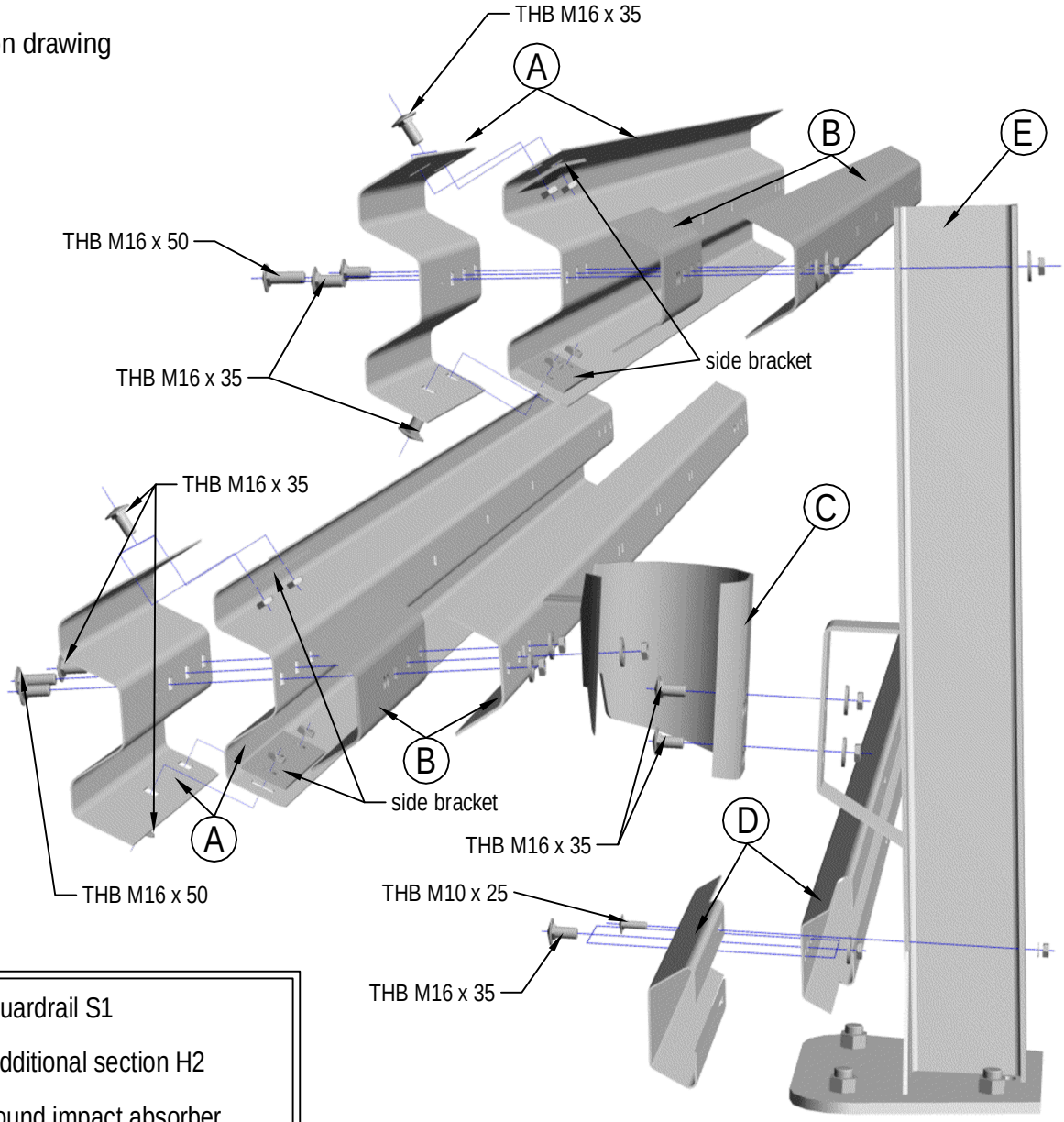

A	guardrail S1
B	additional section H2
C	round impact absorber
D	sliding profile
E	IPE160-post / base plate

01/2015

SAFETY BARRIERS

KREMSBARRIER 1 RH3

Roadside Restraint System with lower guardrail on civil structures

product specification sheet B105/4

dilatation +-100

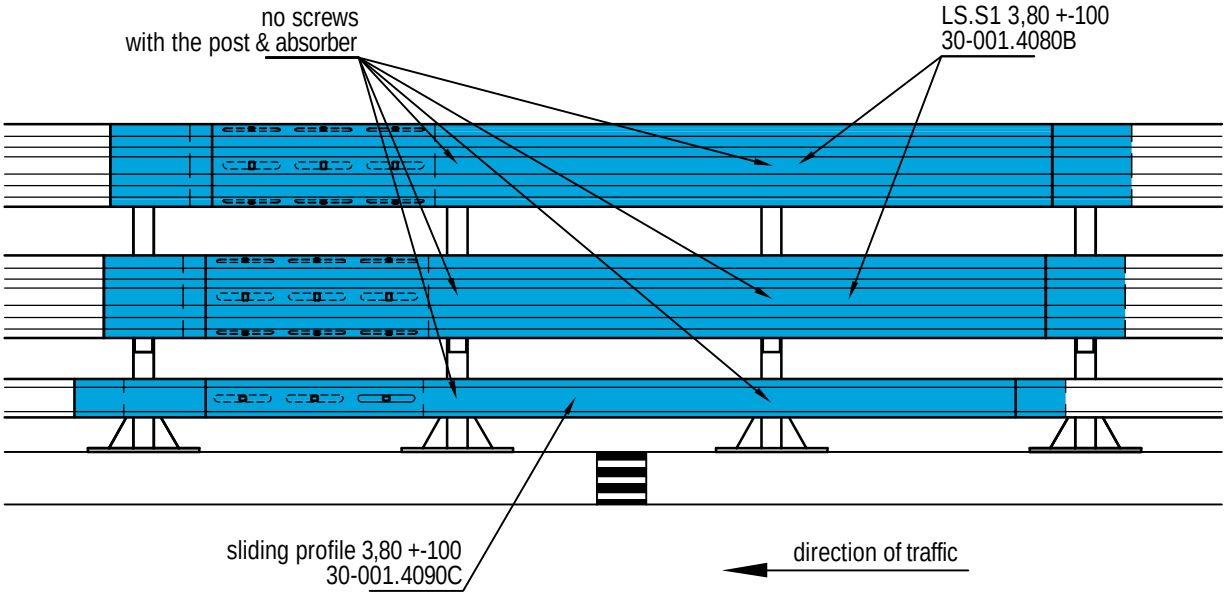

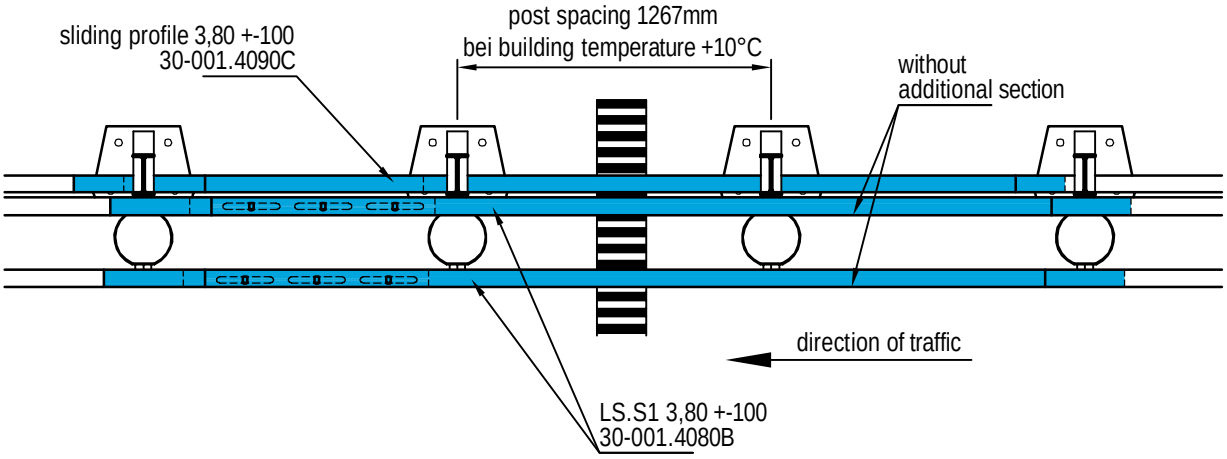

01/2015

SAFETY BARRIERS

CONCRETE ANCHOR TSM B16 x 220

Installation instruction

product specification sheet TSM 220

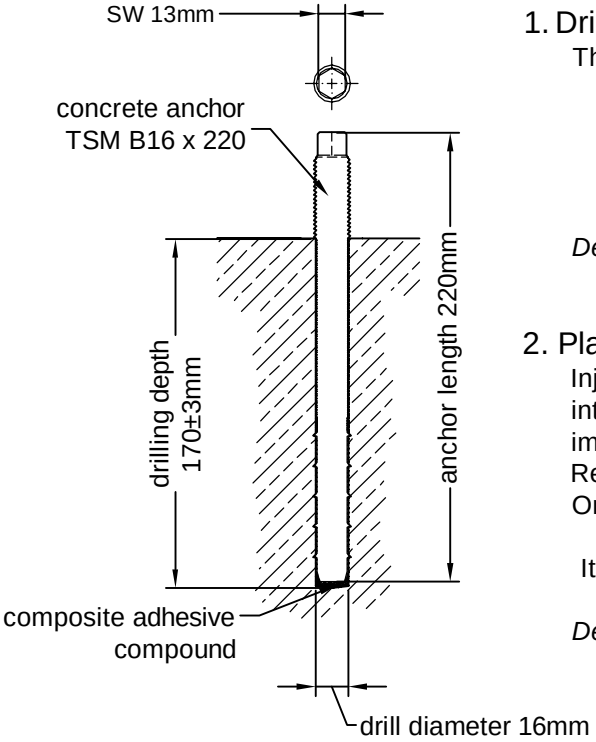

1. Drilling bore hole

The holes are normal to the mounting surface.

- drill diameter 16mm
- drill depth 170 ± 3mm
- controlling the drilling depth
- to clean the drill hole

Details: *The use of a drill rig with a depth stop ensures accurate production drilling.*

2. Placing the anchor

Inject composite adhesive compound (Chemofast) into the drill hole. Turn in screw to a depth of 170 mm, using an impact driver until the compound mass oozes out of the drill hole.
Remove redundant compound mass
One cartridge lasts for about 33 pc. concrete anchors.

It is mandatory to follow the guidelines stated on the cartridge.

Details: *Contribute to the mass of the composite is a special required to press the cartridge matched.*

drilling bore hole

inject the compound mass

screw the concrete anchor

01/2015

COMPOSITE ADHESIVE ANCHOR M24x220

Installation instruction

product specification sheet VA M24x220

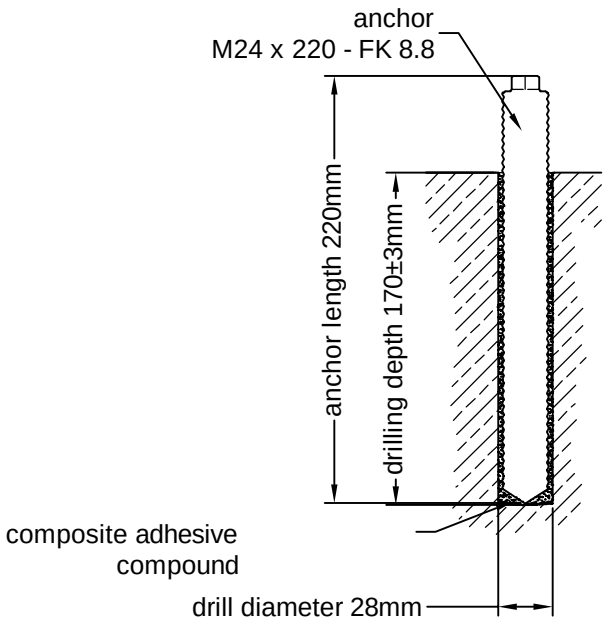

1. Drilling bore hole

The holes are normal to the mounting surface.

- drill diameter 28mm
- drill depth 170 ± 3mm
- controlling the drilling depth
- to clean the drill hole

Details: The use of a drill rig with a depth stop ensures accurate production drilling.

2. Placing the anchor

The M20 mortar cartridge is inserted into the drilled hole and then put the anchor M24x220 rotation. This has an appropriate planting tools and a drill with percussion and a speed of 250 - to 750 rpm done /. It mixes the contents of cartridges. The mortar must be up to the concrete surface is enough! Remove excess mortar. For more information and details about the manufacturer's Capsule and anchors are to be observed.

01/2015

SAFETY BARRIERS

Parts list

KREMSBARRIER 1 RH3

Roadside Restraint System with lower guardrail on civil structures

Requirements for a field with a 3.80 m length

part	name of the item	weight [kg]	drawing- number	material / quality	corrosion protection
2	guardrail S1 3,80m	46,50	30-011.3800-	S355JO	acc. to EN ISO 1461
2	additional section H2	29,00	30-021.3800-	S235JR	acc. to EN ISO 1461
3	round impact absorber	6,10	30-001.1810C	S235JR	acc. to EN ISO 1461
3	IPE160-post/G 1255 2,5 %	36,80	30-001.2820C	35JR/ S355	acc. to EN ISO 1461
1	sliding section 3,80m	28,79	30-001.1830D	S235JR	acc. to EN ISO 1461
4	side bracket	0,78	30-001.1807E	S235JR	acc. to EN ISO 1461
21	THB M16x35-4.6 +nut	0,13	30-001.0990E	4.6	acc. to EN ISO 10684
6	THB M16x55-4.6 +nut	0,11	DIN 603	4.6	acc. to EN ISO 10684
19	washer 40x18x4	0,03	30-001.0995E	100HV	acc. to EN ISO 10684
3	THB M10x25-4.6 +nut	0,04	DIN 603	4.6	acc. to EN ISO 10684
3	washer 11	0,00	ISO 7091	100HV	acc. to EN ISO 10684
9	anchorsystem I or II	-	-	-	-
anchorsystem I					
9	anchor TSM B16 M18x220	0,32	-	10.9	TOGE-KORR
9	hex nut M18-8	0,04	DIN 934	8	acc. to EN ISO 10684
18	washer 50x19x4	0,04	DIN 935	9	acc. to EN ISO 10684
anchorsystem II					
9	chemical anchor M24x220 kpl tZn	0,78	-	8.8	acc. to EN ISO 1461

parts für dilatation

part	name of the item	weight [kg]	drawing- number	material / quality	corrosion protection
2	guardrail S1 3,80 ± 100	57,92	30-001.4080B	S355JO	acc. to EN ISO 1461
1	sliding section 3,80 ± 100	32,94	30-001.4090C	S235JR	acc. to EN ISO 1461
2	guardrail S1 3,80 ± 200	70,26	30-001.4070B	S355JO	acc. to EN ISO 1461
1	sliding section 3,80 ± 200	36,91	30-001.4140C	S235JR	acc. to EN ISO 1461

07/2013